EUROfusion

EUROFUSION CP(15)06/07

L. Savoldi et al.

Development of a Thermal-Hydraulic Model for the Dynamic Simulation of the EU DEMO Breeding Blanket Cooling Loops. Part I: HCPB

12th International Symposium on Fusion Nuclear Technology (ISFNT)
Jeju Island, Korea
(14th September 2015 – 18th September 2015)

This work has been carried out within the framework of the EUROfusion Consortium and has received funding from the Euratom research and training programme 2014-2018 under grant agreement No 633053. The views and opinions expressed herein do not necessarily reflect those of the European Commission.

Development of a thermal-hydraulic model for the dynamic simulation of the EU DEMO breeding blanket cooling loops. Part I: HCPB

Antonio Froio[a], Christian Bachmann[b], Francisco Alberto Hernandez Gonzalez[c], Gianfranco Federici[b], Laura Savoldi[a], Roberto Zanino[a]

[a] *NEMO Group, Dipartimento Energia, Politecnico di Torino, Torino, Italy*
[b] *EUROfusion Consortium, PPPT Department, Garching, Boltzmannstr. 2, Germany*
[c] *Karlsruhe Institute of Technology, 76344 Eggenstein-Leopoldshafen, Karlsruhe, Germany*

A global thermal-hydraulic model of the EU DEMO tokamak is currently under development at Politecnico di Torino. The first module of the global model will simulate the blanket cooling system and it will have to be able to investigate different coolant options and different cooling schemes, to be adapted to the different blanket systems currently under development in the Breeding Blanket project. The paper presents the status and the first steady-state results obtained with the Helium-Cooled Pebble-Bed (HCPB) module of the EU DEMO blanket cooling loop system model. The model is based on an object-oriented approach using the Modelica language.

Keywords: DEMO, breeding blanket, HCPB, thermal-hydraulics, modeling

1. Introduction

One of the goals defined in the EU fusion roadmap Horizon 2020 [1] is the development of a conceptual design of a Demonstration Fusion Power Reactor (DEMO). Following ITER this device shall demonstrate the operation in a closed fuel cycle (→ tritium self-sufficiency) and the production of net electricity from the heat exhausted from the reactor core. The development of a global thermal-hydraulic model of the EU DEMO tokamak has been launched by the EUROfusion Project Management Unit to simulate the cooling loops of the main in-vessel components, including the ex-tokamak parts.

The model is based on an object-oriented approach, within the Modelica framework [2, 3], in order to be sufficiently modular to follow-up the design development.

While the model will eventually allow the transient simulation of the pressure and temperature distribution in the coolant loop during plasma pulse and dwell period, we focus here on the analysis of steady-state conditions.

The first module of the global model will simulate the blanket cooling system, which has to remove about 80% of the thermal power produced in the reactor and to integrate it into a power generation system. The model will have to be able to investigate different coolant options and different cooling schemes, to be adapted to the different blanket systems currently under development in the Breeding Blanket (BB) project, determining the resulting thermal-hydraulic and thermodynamic performances (e.g. heat transfer, pumping power and outlet temperature control), depending on different heat load distributions on the plasma facing components.

The present paper presents the development and the first results obtained with the Helium-Cooled Pebble-Bed (HCPB) module of the model.

2. The HCPB cooling circuit

The HCPB BB will be made of 16 toroidal sectors, each sector being made of 3 outboard (OB) + 2 inboard (IB) segments. Each segment contains 6 breeding modules (BM) [4].

The 48 OB segments and the 32 IB segments are cooled by 2 independent circuits ("A" and "B") in counterflow, see Fig. 1.

While the model is fully parameterized and flexible, the results to be presented here are only of demonstrative nature, for the sake of limiting the needed CPU time, including: 1 OB + 1 IB segments, heat exchanger, pumps, valves, and other elements of the primary cooling loop.

2.1 Breeding module (BM)

The BM object contains 1 breeding zone (BZ) object, 1 first wall (FW) object and 2 cap objects + I/O manifolds. According to the "Integrated" (HCPB-I) cooling concept, the caps, FW and BZ are in series, see Fig. 2.

2.1.1 First wall (FW)

A FW object contains several FW channel objects, including ports for thermal coupling to the neighboring channels in the twin circuit.

A single FW channel object is composed by 3 channels in series: 2 side parts (heated by nuclear load + heat conduction from the BZ) and 1 front, plasma-facing part (heated by FW surface load, nuclear heating and conduction from BZ). The pipe bends are accounted for

author's email: laura.savoldi@polito.it

only as localized pressure drops, to be tuned to account for different losses in IB vs. OB.

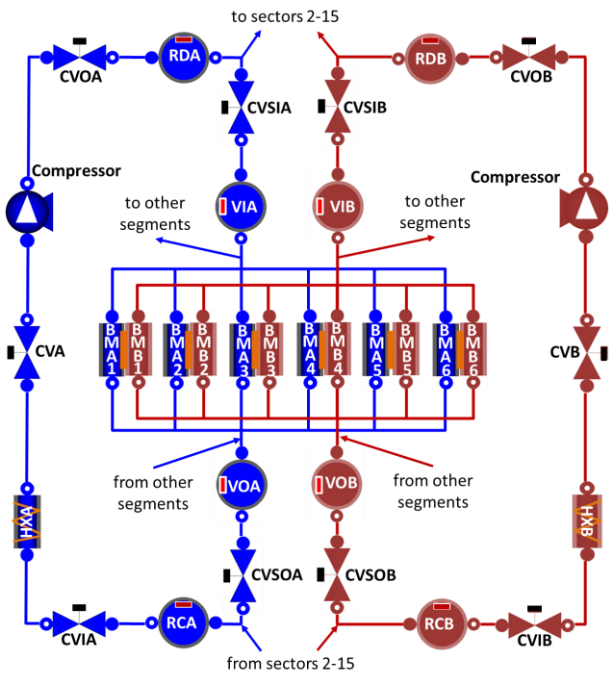

Fig. 1. Schematic of the HCPB cooling loops. The twin circuits A and B are coupled at the BM level. CV: Check Valve; HX: Heat eXchanger; RC: Ring header Collector; RD: Ring header Distributor; V: Volume; BM: Breeding Module.

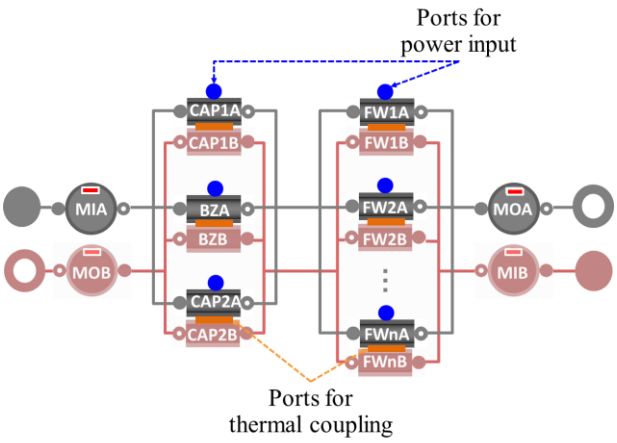

Fig. 2. Schematic of the HCPB-I BM object.

A schematic of a FW channel object is shown in Fig. 3.

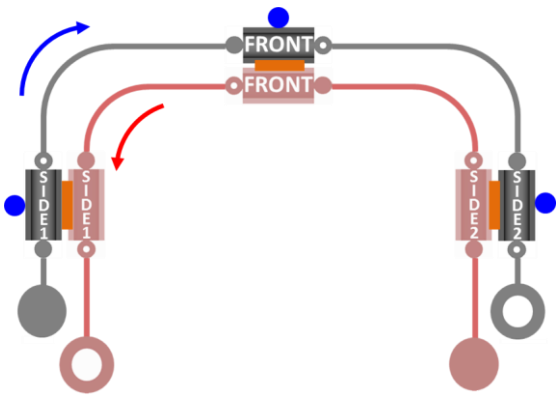

Fig. 3. Schematic of the FW channel object.

2.1.1.1 Object parameterization

The parameters that can be tuned for the FW objects are (default values in parentheses):

- Number of FW channels (56);
- Number of nodes discretizing each of the three parts of a channel (5);
- All the geometrical data (see Table 1);
- Properties of the coolant (Helium model from NIST RefProp);
- Properties of the structural material (density, thermal conductivity, specific heat capacity), as a function of the temperature (see §2.2);
- Heat transfer coefficient (HTC), from different ad-hoc correlations for the front and side parts;
- Different ad-hoc correlations for the friction factor for the side and front parts [5-7].

The heat loads shall be provided as input; the three parts can be coupled to the corresponding elements in the twin circuit, by means of thermal connectors.

Table 1. Geometrical data for the FW object.

	Length [mm]	**Cross section [mm²]**	**Bending angle [°]**	**Wall thickness [mm]**
Side	649.6	13.5×13.5	93.75	2.625
Front	1120.5			5.375

2.1.1.2 Test case

To check the validity of the simple FW object, it is used to compute the pressure drop when the nominal mass flow rate of 79.411 g/s is forced through a single FW channel, without any load applied. The result is less than 3% different from that computed (through CFD) in [4].

2.1.2 Breeding zone (BZ) and BM cap

The BZ is cooled by a number 'm' of cooling plates (CP, see Fig. 4), depending on the poloidal location; each CP is cooled by 20×2 parallel channels, subjected to nuclear heating + heat produced in the BZ.

Ports for inter-channel thermal coupling to the neighbors in the twin circuit (same CP) and to the neighbors in the same circuit (adjacent CP) are provided in the model.

From the thermal-hydraulic point of view, the BM cap is identical to a single CP, except that it is cooled by 11×2 channels (also the other parameters may have a different value). In this case, the thermal coupling between the caps and the first/last CP is neglected (the connectors for the coupling with the twin circuit inside the cap are still provided).

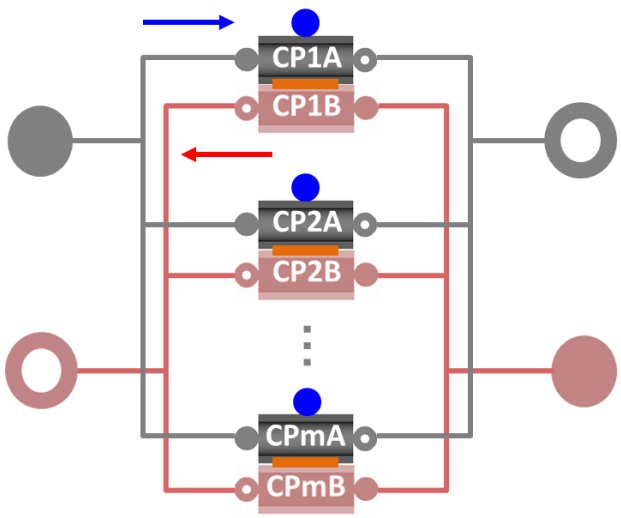

Fig. 4. Schematic of the BZ object.

2.1.2.1 Object parameterization

The parameters that can be tuned for the BZ and cap objects are:

- Number of CPs (71, BZ object only);
- Number of channels in each CP/cap (20/11, respectively);
- Number of nodes discretizing each channel (5);
- All the geometrical data (see Table 2);
- Properties for the gaseous medium (Helium model from NIST RefProp);
- Properties of the structural material (density, thermal conductivity, specific heat capacity), as a function of the temperature (see §2.2);
- HTC (Gnielinski);
- Friction factor correlation (Colebrook).

Table 2. Geometrical data for the BZ and cap objects.

	Length [mm]	**Cross section [mm²]**	**Wall thickness [mm]**
CP	1431	5×2.5	1
Cap		13.5×6	

2.1.2.2 Test case

As a first test case, the model is used to compute the characteristic of a BM cap, to check if the nominal operating point [4] lays on it. The good agreement between the two is shown in Fig. 5.

The second test case is used to check the model in transient conditions, as well as the coupling between the two circuits. A constant mass flow rate is forced through two CPs, and the total heat loads of 100 W and 500 W are applied after 10 s and 30 s to the first CP and to the second CP, respectively. The two CPs are coupled through an 11 mm thick layer of Li_4SiO_4 pebble bed. The results, in terms of outlet temperature evolution for the two CPs, are shown in Fig. 6.

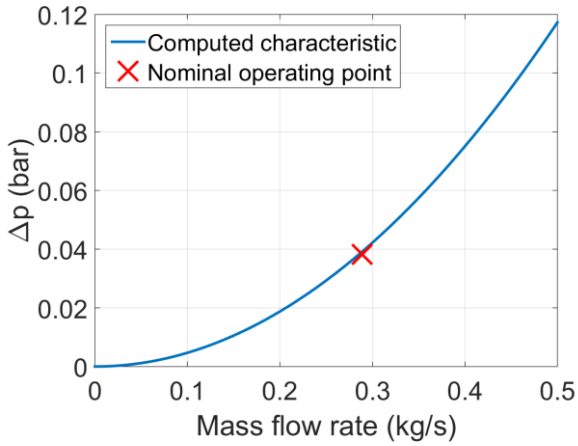

Fig. 5. Test case for a BM cap.

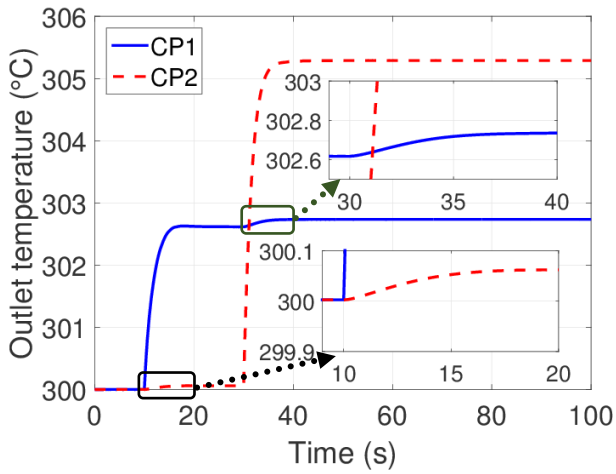

Fig. 6. Test case for two coupled CPs. The effect of the coupling is shown in the insets.

2.1.3 Manifolds

Most of the manifolds can be modelled using 0D objects; however, for BM I/O manifolds (MIA and MOA in Fig. 2) the length L is much larger than the diameter D; this implies that they shall be modelled as a pipe (1D), to account for both capacity and pressure drop, which may not be negligible.

2.2.5.1 Object parameterization

In the case of the 0D lumped parameter manifold models, the parameters are the fluid properties and the

internal volume; for the 1D distributed manifold models, the parameters are:

- Properties for the gaseous medium (Helium model from NIST RefProp);
- All the geometrical data (see Table 3);
- Friction factor correlation (Colebrook)

The wall parameters are not included as, in the case of the manifolds, the walls are considered to be in perfect thermal equilibrium with the fluid.

Table 3. Geometrical data for the BM I/O manifolds.

	Length [mm]	Cross section [mm²]
Inlet	2270	413×274
Outlet		⌀200

2.2 Model equations

The model is written using the object-oriented, declarative language Modelica, version 3.2.1. All the components described up to this point have been developed using ThermoPower models [8, 9]: for the fluid flow, the mass, momentum and energy conservation equations (1) are solved using a 1D finite volume approximation (the time-dependent terms are obviously neglected in the steady-state analysis). The axial heat diffusion in the fluid is neglected in this stage.

$$\begin{cases} A \cdot l \cdot \dfrac{\mathrm{d}\rho}{\mathrm{d}t} = \dot{m}_{in} - \dot{m}_{out} \\ \dfrac{l}{A}\dfrac{\partial \dot{m}}{\partial t} = p_{out} - p_{in} + \Delta p_{friction} \\ A \cdot l \cdot \rho \cdot c_v \cdot \dfrac{\partial T}{\partial t} + \dot{m}\Delta h = \dot{Q}_{in} \end{cases} \qquad (1)$$

The fluid properties are computed using the ExternalMedia library [10]; the properties for the Eurofer97 structural material are taken from [11], while the properties for the breeder Li_4SiO_4 pebbles and for the neutron multiplier Be pebbles come from [4].

3. First results and discussion

As a first test case for the entire model, the nominal mass flow rate of 4.45 kg/s is forced through one BM, in both loops A and B, applying the heat loads reported in Table 4.

Table 4. Heat load applied in the BM test case.

	FW surface load [kW/m²]	Nuclear + breeder unit heat load [MW]
FW	300	0.9765
CP + caps	-	4.7288

3.1 FW object

The distribution of the pressure drop among the components of the first wall channels is reported in Fig. 7a. As expected, because of the symmetry of the problem the Δp is exactly antisymmetric in the two loops. The pressure drop in the front part of the channels is much higher than that in the side parts, because the front part is considered to be ribbed, to enhance the heat transfer, while the sides are considered to be smooth [6].

The same symmetry effect is visible in Fig. 7b, where the temperature increase with respect to the inlet is shown; in the bends no temperature increase can be computed, as they are modelled as pure pressure drops. Again, the temperature variation in the front part is higher, because the plasma-facing wall of it is treated as ribbed.

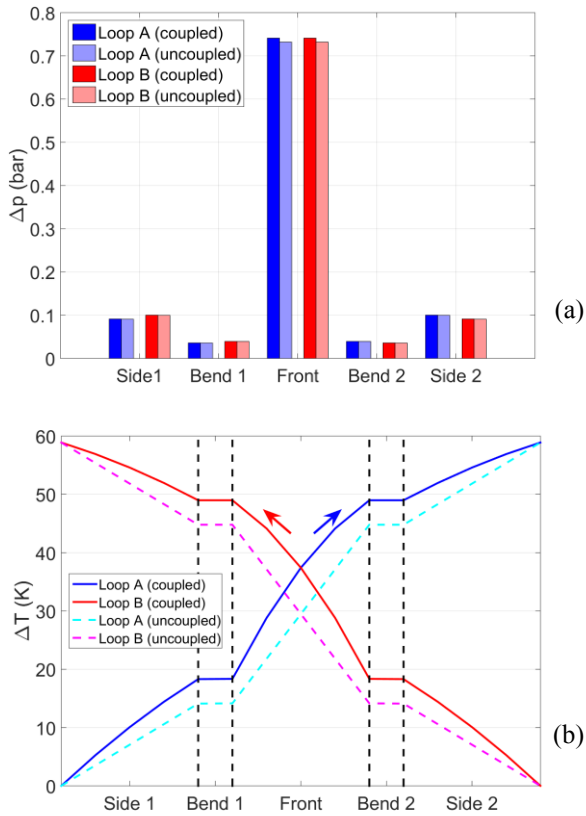

Fig. 7. Results of the first case for FW object: (a) distribution of the pressure drop among the components of a FW channel; (b) evolution of the temperature along the channel. Only the results relative to one channel are shown, as all the channels are identical.

In Fig. 7b the dashed lines represent the result of the same simulation, but performed without accounting for the thermal coupling between the countercurrent channels in the two loops through the Eurofer97 structure; as expected the temperature profile is exactly linear in this case (except for the bends), and the temperature is lower (but for first and last nodes). The effect of the coupling is much less evident in the

pressure drop (Fig. 7a), as it is due only to the difference in the Helium density, driven by the lower temperature.

3.2 BZ and cap

As stated above, from the hydraulic point of view the caps and the cooling plates are identical; hence, the mass flow is equally distributed among the 71 CPs + 2 caps. The temperature increase (with respect to the inlet) in each CP or cap is shown in Fig. 8, for both loops A and B.

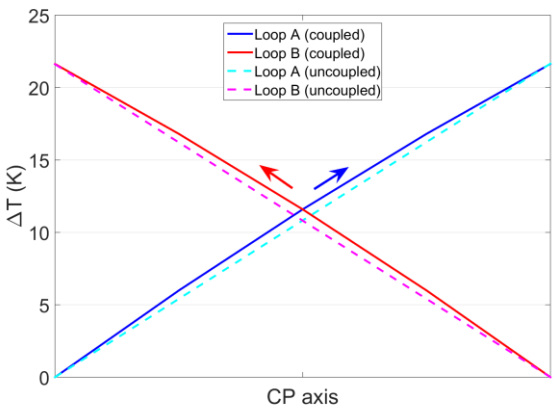

Fig. 8. Results of the first test case for BZ and cap objects: evolution of the temperature along the CP. Only the results relative to one CP are shown, as all the CPs and caps are identical.

In the setup for this simulation, the CPs are coupled through an 11 mm thick layer of Li_4SiO_4 breeder pebble bed. The same load has then been applied in a situation in which the coupling between the channels was neglected, i.e. as if the breeder material was a perfect insulator. The results of this simulation are represented by the dashed lines in Fig. 8. As in the case of the FW channels, the effect of the coupling is to increase the temperature along the channel axis, as well as to cause a deviation from the perfect linearity of the temperature distribution, expected analytically in the case of a uniform heat flux.

4. Conclusions and perspective

A model of the DEMO HCPB breeding blanket cooling system has been developed. It is written using the object-oriented Modelica language and is highly modular, allowing the study of several different cooling options. The model allows the simulation of thermal-hydraulic transients, but for the time being it has been applied to mainly steady-state test cases, showing its correctness.

In perspective, the model shall be extensively used to test several operating scenarios of the EU DEMO, and also to check the effect of alternative cooling options (e.g. HCPB-I vs. HCPB-S) or loop configurations. Moreover, an analogous model is under development for the Water-Cooled Lithium-Lead (WCLL) breeding blanket concept.

Acknowledgments

This work has been carried out within the framework of the EUROfusion Consortium and has received funding from the Euratom research and training programme 2014-2018 under grant agreement No 633053. The views and opinions expressed herein do not necessarily reflect those of the European Commission.

The authors wish to thank Dr. Frederik Arbeiter and Dr. Lorenzo Boccaccini for providing input and helpful hints on the HCPB design.

References

[1] F. Romanelli et al, Fusion Electricity – A Roadmap to the Realisation of Fusion Energy, European Fusion Development Agreement (EFDA), 2012, ISBN 978-3-00-040720-8T.

[2] S. E. Mattson, H. Elmqvist, M. Otter, Physical system modeling with Modelica, Control Engineering Practice 6 (1998) 501-510.

[3] P. Fritzson, Principles of object-oriented modeling and simulation with Modelica 2.2, Wiley, 2003.

[4] EUROfusion IDM, DDD 2014 for HCPB (2MCQCX v. 1.1), 2015

[5] S. Ruck, F. Arbeiter, T. Böttcher, G. Schlindwein and K. Zinn, Heat Transfer and Fluid Characteristics of Rib-Roughened Helium Gas Running Cooling Channels for First Wall Applications, to be published in *Fus. Eng. Des.* via ISFNT-12.

[6] F. Arbeiter, Y. Chen, M. Ilić, G. Schlindwein, F. Schwab, B. Sieglin, and R. Wenninger, Thermohydraulics of helium cooled First Wall channels and scoping investigations on performance improvement by application of ribs and mixing devices, to be published in *Fus. Eng. Des.* via ISFNT-12.

[7] F. Arbeiter, Personal communication.

[8] F. Casella, A. Leva, Modelling of thermo-hydraulic power generation processes using Modelica, Mathematical and Computer Modelling of Dynamical Systems 12 (1) (2006) 19-33.

[9] F. Casella, A. Leva, Modelica open library for power plant simulation: design and experimental validation, Proceedings of 3rd International Modelica Conference, Linköping, Sweden, November 3–4, 2003. 41–50.

[10] https://github.com/modelica/ExternalMedia (Accessed August 27, 2015)

[11] K. Mergia and N. Boukos, Structural, thermal, electrical and magnetic properties of Eurofer 97 steel, Journal of Nuclear Materials 373 (2008) 1-8.