EFDA–JET–CP(14)05/04

R. Salmon, P. Smith, A. West, S. Shaw, D. Rendell
and JET EFDA contributors

Comparison of Different Current Transducers used at JET within the Range 5–100kA for Plasma Control and Monitoring

Comparison of Different Current Transducers used at JET within the Range 5–100kA for Plasma Control and Monitoring

R. Salmon, P. Smith, A. West, S. Shaw, D. Rendell
and JET EFDA contributors*

JET-EFDA, Culham Science Centre, OX14 3DB, Abingdon, UK

** See annex of F. Romanelli et al, "Overview of JET Results", (24th IAEA Fusion Energy Conference, San Diego, USA (2012)).*

Preprint of Paper to be submitted for publication in Proceedings of the
28th Symposium on Fusion Technology SOFT, San Sebastian, Spain
29th September 2014 – 3rd October 2014

ABSTRACT

The JET machine uses a variety of current transducers for control and protection of the plasma, the coils and their associated power supplies. This paper reviews the various measuring technologies, within the range 5–100kA, used on JET to assist with the selection of high-current transducers for future plasma control/tokamak applications; these include Rogowski coils, Coaxial Shunts, Hall-effect transducers, zero-flux CTs and a Faraday-effect optical transducer. The paper considers cost, reliability, accuracy and usability based on up to thirty years of operational experience of the transducers.

Accuracy of the magnet current measurements is important in the control of tokamak plasmas and there has been considerable effort to improve it. Recently a Faraday-effect optical current sensor has been used to measure up to 67kA in the Toroidal Field (TF) coil circuit. This measurement system has been calibrated at JET to verify its 0.1% accuracy. In addition the data acquisition system for this measurement is automatically calibrated at the start of each JET pulse. The improved accuracy has been shown to enhance the spatial consistency of kinetic profiles at JET [1]. Due to its portability the JET project intends to employ the same Faraday-effect current transducer to calibrate other high current transducers by temporarily fitting it to other busbars; such as those in the Ohmic Heating network.

1. INTRODUCTION

The JET fusion machine has been in operation for the last thirty years with many upgrades to its structure, operating conditions, heating systems and diagnostics. JET magnet power supplies have been upgraded and some modified in accordance with the requirements of the experimental campaigns. One aspect that has been frequently reviewed is the high current measurements that are used by various groups across the JET operational team, who require that they are accurate and reliable.

The JET magnet power supplies can be subdivided into two main systems: The Torodial Field (TF) System, see figure 1, and the Polodial Field (PF) System, see figure 2. The former comprises of the Toroidal Flywheel Generator Converter (TFGC) in series with a two TF Static Units (TFSUs), which is able to deliver up to 80kA to the TF coils. The latter involves seven different magnet circuits including the Ohmic Heating (OH) network and is considerably greater in complexity. The OH network supplies the central solenoid (P1) using the Polodial Flywheel Generator Converter (PFGC) with the centre six coils of P1 connected in parallel with a two quadrant thyristor converter (PFX). This allows currents of 40kA through the end coils and 60kA through the centre six coils. The remaining polodial coils, divertor coils and Error Field Correction Coils (EFCC) are individually supplied by an amplifier or set of amplifiers that can be seen in figure 2. The full description of the power supplies is beyond the scope of this paper.

This paper will review the various Current Transducers (CTs) that are used in the JET magnet power supplies with the benefit of thirty years of operational experience.

2. CURRENT TRANSDUCERS AT JET

Several current transducer technologies are installed for monitoring, protection and control on the DC side of the JET magnet power supplies. These transducers must adhere to certain requirements dependent on the circuit specifics that include:

- Ability to measure high current pulses lasting approximately 30s, in the range 1-100kA, and a frequency bandwidth of DC to 5-10kHz, at a duty cycle of 15 minutes.
- Good electromagnetic insensitivity. They must operate in a high noise environment due to presence of many switching elements such as circuit breakers, spark gaps and thyristor converters.
- High availability, to minimize the loss of expensive experimental time for the JET machine.
- High reliability: the transducers are an essential part of the protection systems.

Four types of current transducers are presently used on the JET magnet power supplies; Coaxial shunts, Hall-effect current transducers, zero-flux current transformers with sensing winding and a Faraday-effect optical fibre current transducer. Rogowski coils are also used for coil current measurement by the Coil Protection System (CPS). These transducers form part of the overall measurement systems that is coordinated by the Control and Data Acquisition System (CODAS).

Signals generated by the transducers are sent to a Local Control Cubicle (LCC) where they are processed for local monitoring and control purposes and fast protective action. The LCC interfaces with CODAS where the signals are digitised, with sampling rates up to 5kHz, and then archived.

3. SHUNT RESISTORS

Coaxial shunts are a well-known and widely used measurement system for high current pulses. At JET these are used in conjunction with fibre optic converters to enable data transmission across HV boundaries. They consist of a non-magnetic low resistance cylinder surrounded by another conducting cylinder that are connected together at one end. Current enters through the inner cylinder and returns through the outer cylinder. The voltage drop across the known shunt resistance is proportional to the current.

The Ohmic Heating (OH) circuit uses a large number of coaxial shunts, of which many have been in operation over the last thirty years with only minor repairs or upgrades. The larger high energy shunts have high thermal ratings to cope with I^2T losses and so require forced air cooling which increases the equipment space and maintenance. Most of the shunts at JET are large with comparatively thick cylinders making them only suitable to spacious accessible areas for installation and maintenance. The bandwidth of the coaxial shunts is limited by skin effects, which depends on the resistivity and thickness of the inner cylinder, and varies between 8–22kHz for shunts used in the OH circuit.

One of the most troublesome faults of these devices has been due to the cooling system failures which resulted in a complete upgrade in the mid-90s. There have also been issues with some of the fibre optic links between the transducers and its LCC that cause drift in the signal due thermal drift and age of the analogue components.

4. HALL-EFFECT CURRENT TRANSDUCERS

JET magnet powers supplies use many Hall- effect current transformers of the compensating current (zero-flux) type. In this design a coil of wire is wrapped around an open loop iron core with a Hall plate suspended in the air gap of the magnetic circuit. The Hall plate senses the magnetic field that occurs in the core and is used to control the compensation current. The device surrounds a busbar and any magnetic fields produced are concentrated within the iron core circuit, the plate voltage output is used in feedback control of the wire coil current until it produces an equal but opposing field in the iron core.

The JET magnet power supplies uses 13 compensating current Hall-effect transducers on the DC side for monitoring; many more are used purely for protection. The output of each flywheel generator is measured by a large 100kA current transducer that consists of six Hall-effect sensors symmetrically arranged around the busbar; the summed output of the sensors offers the total current and nullifies external field contributions. A further five 6kA transducers are fitted across the output of the ERFA (Enhanced Radial Field Amplifier) that was installed in 2009. Six are part of the ASN (Additional Switching Network), each with eight Hall effect sensors, capable of measuring a nominal 10kA or 40kA for 1.6 seconds.

Zero-flux Hall effect transducers have shown to be durable and generally reliable. The major design constraint of these transducers is the size and weight of the devices making them difficult to retrofit and reduces their maintainability. The majority of failures with the transducers have been due to malfunctions in the signal conversion electronics. On the FGC devices subsequent failures have resulted in two redesigns of the conversion and processing electronics cubicles, principally to improve access during faults [2]. A notable design fault of the ERFA output transducer caused non-linearity of the output data. The busbar entering the transducer was coiled back and over the top of the transducer head containing the hall sensor, the returning current caused interference and signal discrepancy. Repositioning the transducer and ensuring nothing encroached upon a forbidden region above the Hall sensor restored the output to its required accuracy.

5. ZERO FLUX CURRENT TRANSFORMERS WITH SENSING WINDINGS

Similar to the operation of the Hall-effect transducer described above, the zero-flux current transformer uses a toroidal core of ferromagnetic material to surround the busbar and channel the magnetic flux. A wire coiled around the iron core provides a feedback signal to modulate the current in a compensating winding which balances the flux on the core to zero. In practice, the limited gain of the amplifier driving the compensating current results in measurement errors. Careful control of burden resistors and harmonic filters are needed to ensure accuracy is restored.

Fourteen high current transducers of this type are used at JET as can be seen in figure 2. Two were originally installed on the TF circuit but were later replaced with shunts after successive failures. The remaining DCCTs operate up to 44kA and have demonstrated a high level of durability over the last thirty years of operations. A particular notable fault resulted in a gradual decline of

the saturation limit of the PVFA1 DCCT due to failed parallel transistors to the power amplifier reducing the current limit to 36kA. Similar faults on the original TFSU DCCTs resulted in their replacement with shunts.

6. ROGOWSKI COILS

A Rogowski coil consists of a helical coil of wire with the return wire feeding through the centre of the helix so that both ends of the circuit are at the same end of the coil. The helical assembly is then wrapped around the busbar and a voltage is induced into the coil proportional to the rate of change of current.

The main use of Rogowski coils at JET is in magnet protection where they were retrospectively fitted around individual coils and busbars to provide signals for CPS (Coil Protection System). On the TF system there are 32 Rogowskis; one on each TF coil, and eight on the TF busbars in the central basement. Additionally on the PF network there are sixteen on the PF coils and ten on various PF busbars in the central basement.

The Rogowski coils used have a theoretical limit of 1MA with a frequency response from 0.1Hz-1MHz. However, the bandwidths of the integrators used in JET are limited by 16-bit ADCs with a conversion limit of 10kHz on each channel. This is further reduced as CPS samples at 1ms though other diagnostics sample up to 5kHz. Each JET coil has a Rogowski wrapped around it multiple times to improve accuracy and the ampere-turn measurement is used to compare individual coil and total busbar current for short- coil protection. This configuration, however, results in a reduced current rating of 100kA for the transducer equipment.

Over the last twenty years of operations only one Rogowski, out of sixty, has required replacement. The main advantage of this technology is the ability to retrofit them onto busbars and enclosed coils, and without an iron- core their reduced size was ideal for the confined spaces of the JET tokomak. The transducer accuracy will be affected by the winding, tolerance, turns density and cross sectional area of the wrapped coils and so installation procedure must be well controlled. At JET the Rogowskis installed have accuracy better than 1%.

7. FARADAY-EFFECT OPTICAL CURRENT TRANSDUCER

Recently a 130kA DynAmp LKCO (brand name) has been installed on the JET TF circuit (figure 1) to measure current using the faraday- effect. The magnetic field generated by the busbar current interacts with two oppositely polarised light beams, causing their phases to shift in opposite directions. The phase shift is proportional to $\phi H \cdot dl$ nd is therefore proportional to the current flowing through the fibre loop, allowing immunity to external fields.

The optical transducer measures up to 130kA and provides a voltage output scaled as 20mV:1kA. The accuracy claimed is 0.1% [3] of the measured current for currents of greater than 10% of full scale. It is claimed to be accurate up to 110% of its nominal maximum current extending the operating range 143kA. This would allow measurement of currents up to 70kA (in the toroidal field coil) to be measured with double precision by enclosing the current in two loops of the sensor fibre.

A report by E.Belonohy [1] showed significant spatial inconsistencies with kinetic profiles used by various diagnostics in the JET plasma. It was suggested that an important factor was the accuracy of the TF current measurement used in the calculations. This led to the installation of the optical transducer to improve the accuracy to 0.1% exceeding the previous 0.5-1% offered by the TFSU shunts and FGC hall-effect compensating current transducers.

Internal calibration of the optical transducer was conducted to ensure that it met the requirements of the diagnostic calculations; the calibration circuit is shown in figure 3. Equivalent currents up to 140kA were produced by injecting up to 7A through the four calibration coils each of 1000 turns with five loops of the sensor fibre through the coils. The calibration current was measured by measuring the voltage across a calibration resistance. The ratio of the optical transducer shunt voltage and the calibration resistance voltage was measured using a fluke 8508A reference multimeter. The claimed accuracy was verified for currents up to 140kA.

There is little operational experience and it has been succesful so far. The installation of the device was simple due to its 'clip on' nature and it is intended that it will be moved to other systems to calibrate other transducers. It should be noted that the control and processing of the signals is complex and should a fault occur it will be difficult to diagnose and resolve.

Figure 4 shows the output current of for a 63kA TF pulse recorded by the optical transducer, two coaxial shunts and a Hall-effect zero flux transducer. The optical transducer demostrates a very accurate and stable output that has already benefitted the calculations performed by the diagnostic systems.

8. COMPARISON AMONG THE TRANSDUCER TYPES

This comparison is based on up to thirty years of operational experience at JET with most of the technologies, the exception being the Faraday- effect transducer that has only been in operation for four months. This review is restricted to the models installed although some of analysis is relevant to all transducers of a particular technology.

8.1. INSTALLATION CONSTRAINTS

The most difficult to install is the coaxial shunts due to their large size and potential requirement for forced air cooling. Along with the high current hall-effect and zero-flux transducers they are difficult to retrofit due to a high space requirement and the undesirable topological connection to the busbars. Rogowski coils and the optical transducer are both well-suited for 'clip on' applications and the absence of large iron cores makes them ideal for confined spaces that are prevalent in tokomak applications. However, the use of flexible coils and optical fibres leads to devices with lower mechanical strength increasing the probability of installation damage and errors.

8.2. MAINTAINABILITY

As with Installation the ability to maintain coaxial shunts, zero-flux current transformers and hall-effect transducers is impeded by the bulk of the devices and being inherently incorporated into their electrical circuit. This is improved in the Rogowskis and the Faraday-effect transducers allowing

them to be moved easily. The numerous CTs at JET measure the current on the flow and return to the coils. In most cases this allows for each transducer to be calibrated against its corresponding CT in the same circuit greatly improving the identification of measurement errors. The new optical transducer has not been installed long enough to give a sufficient qualitative review. As has been noted the control and instrumentation of this device is complicated and would certainly inhibit the identification of faults.

8.3. ACCURACY

The accuracy requirements of the JET power supplies are not especially high and all transducers were originally specified to have an accuracy better than 1%. The greatest challenge to accuracy is the high electro-magnetic interference present across the power supplies, though filtering is often used as bandwidth requirements are low. Recent discrepancies in plasma spatial mapping drove a greater demand on accuracy than the original transducers were able to produce. The faraday-effect transducer was installed after it was confirmed on site to operate at accuracies of 0.1% up to 140kA. This significantly exceeds other technologies used at JET and has improved spatial mapping accuracies by 1.6% [1].

8.4. RELIABILITY

All the transducer types have a good reliability record over the last thirty year, excluding the optical transducer which has been recently installed. The coaxial shunts have arguably been the most un-reliable which is mainly due to their peripheral components such as cooling systems. Hall effect and zero-flux current transducers reliability has been approximately equal, both have suffered various electronics failures which has highlighted the benefit of ensuring good access is maintained to the control and acquisition cubicles. This is equally true of the Rogowski coils whose integrating circuits suffer from electro-magnetic interference and thermal drift.

ACKNOWLEDGEMENTS

Thanks are due to the many staff in the JET tokomak Power Supplies Department whose comments and experience aided the authors' analysis. Also to DynAmp for making information and data available for the LKCO Faraday-effect Current Transducer that was used in this comparison.

This work was supported by EURATOM and carried out within the framework of the European Fusion Development Agreement. The views and opinions expressed herein do not necessarily reflect those of the European Commission.

REFERENCES

[1]. B. Eva, "Toroidal magnetic field measurements at JET," 2013.

[2]. R. O. J, "Halmar Report," 2006.

[3]. DynAmp, "LKCO – Fully Compensated, Closed-Loop Fiber Optic High Current Measurement," September 2011. [Online]. Available: www.dynamp.com. [Accessed 02 September 2014].

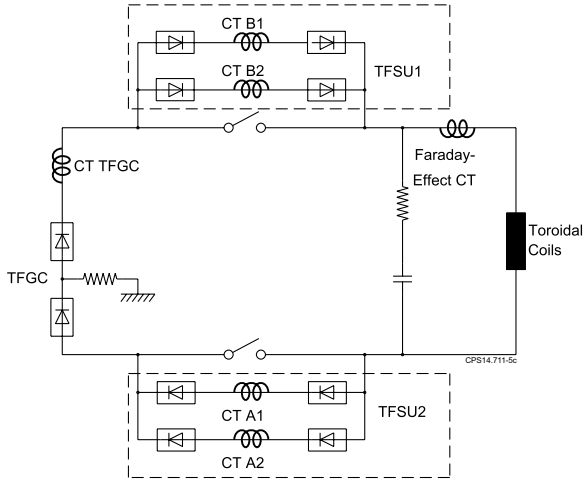

Figure 1: Toroidal Field system schematic showing the location of the main current transducers.

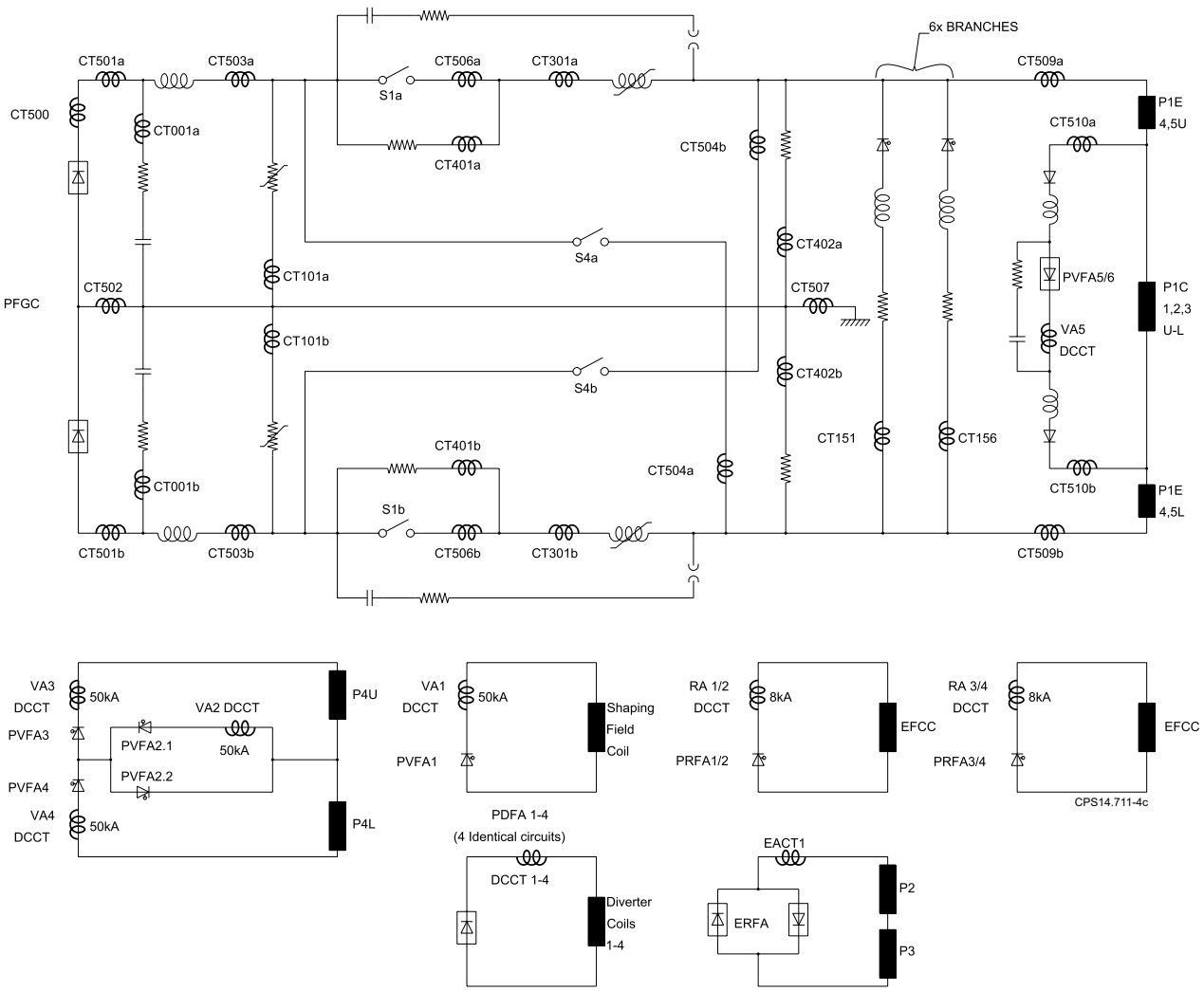

Figure 2: Poloidal Field system schematic configuration showing the main current transducers.

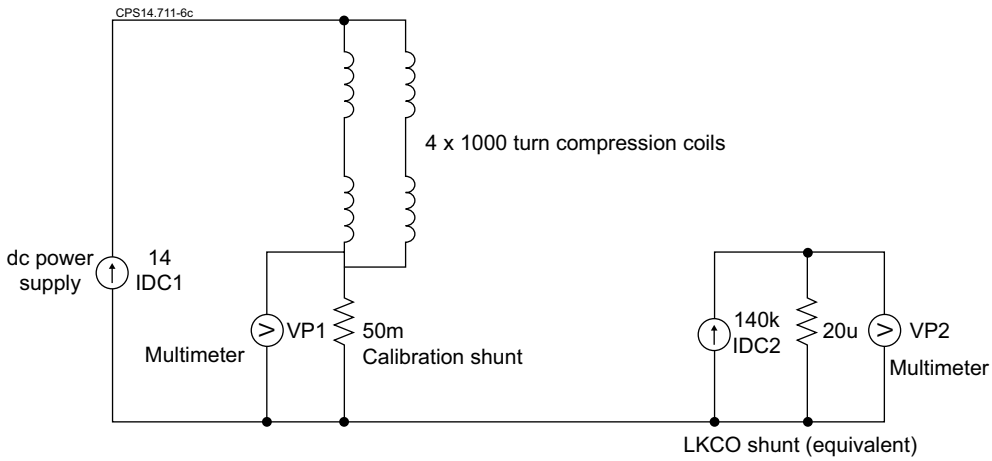

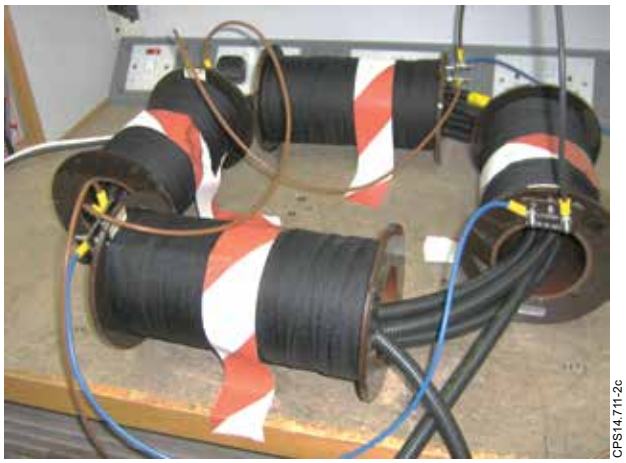

Figure 3: a) Schematic of the optical transducer calibration circuit with b) a picture of the fibre wrapped five time through four 1000-turn calibration coils.

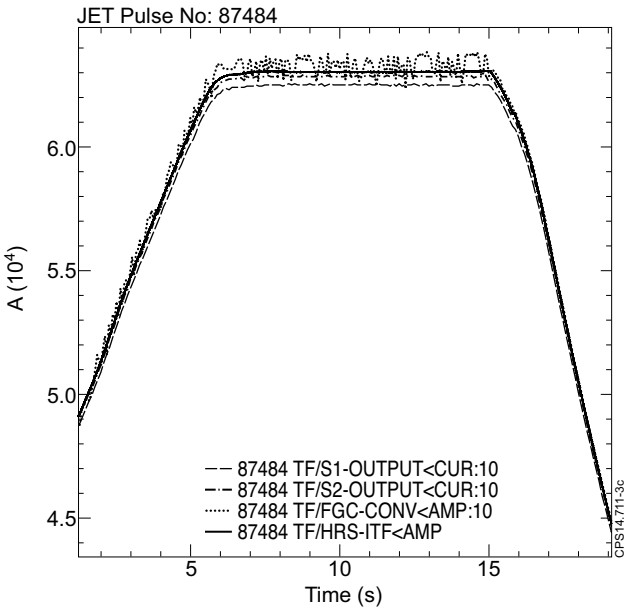

Figure 4: Comparison of the optical transducer (HRS- ITF) with the TFGC Hall-effect zero flux CT (FGC-CONV) and the TFSU shunt transducers (S1/2-OUTPUT) for pulse 87484.