EFDA–JET–CP(13)05/03

G. Stankunas, D.B. Syme, S. Popovichev, S. Conroy, P. Batistoni
and JET EFDA contributors

Safety Analyses in Support of Neutron Detector Calibration Operations at JET

Safety Analyses in Support of Neutron Detector Calibration Operations at JET

G. Stankunas[1], D.B. Syme[2], S. Popovichev[2], S. Conroy[3], P. Batistoni[4]
and JET EFDA contributors*

JET-EFDA, Culham Science Centre, OX14 3DB, Abingdon, UK

1EURATOM-LEI Association, Laboratory of Nuclear Installation Safety, Breslaujos str. 3, LT-44403 Kaunas, Lithuania
[2]EURATOM-CCFE Fusion Association, Culham Science Centre, OX14 3DB, Abingdon, OXON, UK
[3]EURATOM-VR Association, Department of Physics and Astronomy, Uppsala University, Box 516, SE-75120 Uppsala, Sweden
[4]EFDA-JET Culham Science Centre, OX14 3DB, Abingdon, United Kingdom and EURATOM-ENEA Association, Via E. Fermi,40, 00044 Frascati, Italy
** See annex of F. Romanelli et al, "Overview of JET Results", (24th IAEA Fusion Energy Conference, San Diego, USA (2012)).*

Preprint of Paper to be submitted for publication in Proceedings of the
11th International Symposium on Fusion Nuclear Technology, Barcelona, Spain
16th September 2013 - 20th September 2013

ABSTRACT

Neutron detectors in fusion devices need to be calibrated to provide the absolute neutron yield and the fusion power produced in fusion reactions. A new in-situ calibration of the JET neutron detectors was recently performed using a ^{252}Cf neutron source with intensity of about 2.7×10^{8} n/s. The source was delivered to the JET facility within a Transport Flask and the surface radiation levels must fall within transport regulations. Some contingency scenarios required transfer of the source into special shields: the Operational Shield and the Auxiliary Shield. In this paper we describe the neutron calculations that have been carried out to evaluate the dose rate leakage from the shields which may contain the neutron source. The calculations have been performed using accurate modelling of the neutron and gamma ray emission from the ^{252}Cf source, and from the three shields. The differences on calculated dose rates deriving from the use of different flux-to-dose conversion factors have also been investigated. A comparison of dose rates calculated and measured is presented from the bare source (in cell) and with the source within its Transport Flask.

1. INTRODUCTION

Neutron detectors in fusion devices need to be calibrated to provide the absolute neutron yield and the fusion power produced in fusion reactions. In large machines like JET, and even more in ITER, intense calibration neutron sources must be employed in order to produce statistically accurate signals in the detectors and in reasonable time intervals. The new in-situ calibration of the JET neutron detectors was performed in April 2013 by moving a standardized ^{252}Cf point neutron source inside the vacuum vessel by remote handling, and recording the detector response [1].

The scope of the paper is to evaluate the dose rate leakage from shields which contain the ^{252}Cf neutron source during its transportation and storage. The dose rate leakage from shields, i.e. the Transport Flask (which delivers the source) and for the Operational shield and the Auxiliary Shields (which shield the source in various contingency scenarios), are calculated considering both neutrons and gammas emitted, and dose rate maps of the emitted radiations at different distances from the sources are produced. The calculations have been performed using accurate modelling of the neutron and gamma ray emission from the ^{252}Cf source, and from the three shields. The predictions are used to ensure safe working conditions for staff near the shields in particular circumstances. These include, for example, the transportation and receipt of source in the Transport Flask into the JET torus hall and the transfer of the source and its presentation to the remote handling system [2] which will extract the source and deploy it in the torus.

These calculations were essential for planning the calibration and understanding of the safety implications of the various source deployment situations in the in-situ JET neutron calibrations. Radiation emissions from the neutron source in the torus or in the Operational shield may limit personnel access to the torus area and limit the extent of contingency action.

In this paper we describe the neutron calculations that have been carried out to evaluate the

dose rate leakage from the shields which may contain the neutron source. The differences on calculated dose rates deriving from the use of different flux-to-dose conversion factors have also been investigated. A comparison of dose rates calculated and measured is presented from the bare source (in cell) and with the source within its Transport Flask.

2. COMPUTATIONAL TOOLS AND ^{252}CF SOURCE

The calculations presented in the paper were performed using the MCNPX 2.7.0 Monte Carlo code [3] and the FENDL-2.1 [4] cross section library. The first mesh type (Type 1) was used to score track- averaged data of flux. The ICRP-74 [5] flux-to-dose conversion coefficients for neutrons built-in to MCNPX were used to calculate the ambient dose equivalent due to neutrons. Concerning the gamma doses, since no data from ICRP-74 was built-in in MCNPX, manually entered conversion coefficients were used for calculation of the ambient gamma dose equivalent. The operational quantity provided and used was ambient dose equivalent, H*(d). MCNPX code has also built-in ANSI/ANS 6.1.1-1991 libraries for flux-to-dose conversion factors [6], which were also used for comparison with ICRP-based calculations and measurements. More details on this case will be provided later in this paper.

The definition of the ^{252}Cf spontaneous fission neutron and gamma spectrum was taken from the JEFF 3.1.1 [7]. The emission rate of the source used in the calibration was first measured in January 2011 as 4.8×10^{8} n/s [8]. A new measurement of the source absolute intensity and of dose rates close to the source were repeated in February 2013. The measurement of the intensity was performed by National Physical Laboratory (UK) on 14th February 2013 at 12 noon GMT. The emission rate was preliminary evaluated to be 2.748×10^{8} s^{-1}, ± 0.53% (1s) [9]. Using these characteristics of the ^{252}Cf source, calculations of dose rates were performed for the cases of the Transport Flask (TF), Operational Shield (OS) and Operational Shield with Auxiliary Shields (OS with AS).

In the MCNPX calculations, the SDEF card was used to model the ^{252}Cf spontaneous fission neutron point source. The point source was located in the middle of the source casing void and this type of source was used in all calculations. The ^{252}Cf neutron source within the single inner capsule with spacers was used for housing. The capsule and the spacers are made of 316L stainless steel (Fig.1). The neutron source is inserted in and removed from the flask by means of batons: the neutron source holder or “baton” consists of the source baton, which contains the neutron source, and the mascot baton which connects the source baton to the hand of the Mascot manipulator at the end of the Remote Handling boom. Both batons are made of aluminium. They are engaged by a stainless steel (316L) screw going through the mascot baton and connected via the connector which is made of bronze. In the JET facility, the source is received within its Source Baton [10] and within its TF and then transferred to the remote handling boom tent in the torus hall. The neutron source must be retrievable to a safe shield point. For this reason, it is withdrawn back to its TF for return at the end of the measurement series, by movements exactly as for entry, but in the opposite sense.

The TF has been modelled as a cylinder with dimensions 113cm of length and 48.5cm of radius.

The dominating material is polyethylene (including the main part of flask, internal sleeves (points 2-4) and plug rod (point 7)). Aluminium alloy plug caps (points 5-6) were taken into the model. The composition of the lead at the center of the shield (see Fig.5 left hand side picture, point 1) has 4% of antimony. This has a substantial capture cross section and gives an appreciable gamma dose rate contribution after neutron irradiation. The antimony is added as an integral component of the lead alloy to reduce its softness. The source baton is short enough to allow transport inside the normal TF.

The key contingency provision is given by the Operational Shield (OS) which is a rectangular shield of size 370mm (width) × 970mm (length) × 800 mm (height), limited by the port entry and carried on the second remote handling boom. Just as for the TF, the dominating material is polyethylene with the central shield made of lead of 240mm in length and 15 mm thick. The AS structure contains two identical polyethylene slab structures with dimensions the same as for the OS, except for the height which is taller by 100mm. The top part is located 20 mm above the OS and the bottom part is shifted by 80mm in comparison with the OS and both parts are covered by aluminium alloy plates.

3. CALCULATIONS FOR BARE SOURCE AND COMPARISON WITH MEASUREMENTS

On 9th of February, 2013, measurements of the gamma dose rate and the neutron dose rate at 1 m distance from the bare source were performed. The error in the individual measurements is about ±30%, although measurements taken with different monitors can give answers different by a factor of two. This allowed us to make the comparison between calculations and experimental values from the measured neutron and gamma dose rates from the bare source in the cell (see Table 1). Both the source and the detector were separated from the concrete floor of the cell bench by about 30 cm. The scattering from the floor was not taken into account in the modelling. During the course of calculations, the impact of different dose conversion factors was discussed. An analysis was performed to estimate variations on dose rates using different factors.

For the case with bare ^{252}Cf source in the air environment the analysis is carried out using two different conversion factors, i.e.: 1) ANSI/ANS 6.1.1-1991 (ROT normal to length & rotationally symmetric); and 2) ICRP-74 Conversion coefficients for the ambient dose equivalent, H*(10). The operational quantity given is the ambient dose equivalent, H*(d). The comparison of the above dose conversion factors showed that ANSI/ANS 6.1.1 provides dose rate values lower by a factor of 3 compared to ICRP values for gammas. A smaller difference (about 20%) was observed for neutrons. ICRP-74 calculations show a much better agreement with measurements. Figure 4 shows ICRP-74 and ANSI/ANS 6.1.1-1991 conversion factors' values for photons and neutrons.

3. SHIELD CALCULATION AND COMPARISON WITH MEASUREMENTS

Three cases were investigated in the void (without air) environment: 1) the source-in-baton within

the TF; 2) the source-in-baton within the TF, with the central plug half removed (outer part is half removed, i.e. ~30 cm); 3) the source-in-baton within the TF with the complete central plug removed (both parts). In addition, dose rates at each end cap and in a ring round the mid plane were considered.

Table 2 contains the dose rate values, normalized to last measured source activity, and the comparison of dose rates from the bare source and the TF case calculations. Several specific points were taken to explore the impact of the shield to dose rate values. The mean of four values perpendicular to the central plug (i.e. east, south, west and north direction) was taken from two different distances, i.e. 1.0 and 1.5 m from the center of the source. Or, in other words, 1.0 m from the center of the source and 1.0 meter from the surface of the structure of the TF. Other four values were taken along the central plug with same distances as described above, i.e. two values towards the inner part and two towards the other part of the TF (see details in Fig.4). Analysis reviled that the shielding of the TF can reduce dose rates up to 3 orders of magnitude for neutrons and up to 2 orders of magnitude for gammas.

In order to analyze the impact of conversion factors the dose rates were calculated using both ICRP-74 Flux-To-Dose Equivalent Rate Conversion Factors and ANSI/ANS 6.1.1-1991 (ROT normal to length & rotationally symmetric). As it is shown in Table. 2, higher values by the factor of up to 4 can be observed in the neutron dose for the ICRP-74 case. Such a discrepancy can be explained by the plot in Fig.4 where ICRP and ANSI/ANS conversion factors showed approximately the same difference (by factor of 4.5) in flux-to-dose conversion values. On the other hand, it cab seen also in Fig.4 that the comparison between ANSI/ANS 6.1.1-1991 and ICRP-74 conversion factors indicated no difference on the gamma dose rates for energies above 0.6 MeV. The analysis of ANSI/ANS-6.1.1 and ICRP-74 conversion factors showed the enhanced dose rate for ICRP-74 calculations. Such analysis was required in order to ascertain the most appropriate conversion factors for our case. The ICRP-74 dose rates show a much better agreement with measurement although they always underestimate the experimental values by up to a factor of 4. A possible explanation for such underestimation is that the present calculation model do not include any structure surrounding the source and therefore it does not take into account any background radiation.

As described above for the TF case, the same procedure with the selection of several key points of interest was considered for dose rate analysis in the OS case. The comparison of dose values between OS and the OS with AS structure is represented in Table 3. Since the OS is smaller than the TF, the dose rates are higher for the OS alone. Calculations show that the reduction can reach up to 3-4 orders of magnitude for the neutron dose rate from the OS and it can be reduced by the factor of up to 20 by the OS with AS.

The impact of the AS structure is presented in the same table. The increase of the shielding efficiency could be greater by a factor of 10 in comparison with the case when the source is shielded only by the OS. Due to the addition of the AS, the considered distances were different from the previous case, i.e. 2.0 m instead of 1.5 m from the source, since the outer surface of the OS with AS is located at about 60 cm from the center of the OS, where the ^{252}Cf source is placed. Note, that

ICRP conversion factors were used for both OS and OS with AS cases, due to the better agreement with experimental values for bare ^{252}Cf source and TF cases considered.

CONCLUSIONS

Neutron detectors in fusion devices need to be calibrated to provide the absolute neutron yield and the fusion power produced in fusion reactions. In large machines like JET, and even more in ITER, intense calibration neutron sources must be employed in order to produce statistically accurate signals in the detectors and in reasonable time intervals.

In the new in-situ calibration of the JET neutron detectors of April 2013, a ^{252}Cf neutron source was used with an intensity of 2.738×10^{8} n/s. The source is introduced and deployed inside the vacuum vessel by remote handling. The source is delivered to the JET facility within a TF and the surface radiation levels must fall within transport regulations. However, some contingency scenarios may require transfer of the source into special shields: these are the OS and the AS.

In this paper we have described the neutron calculations that have been carried out to evaluate the dose rate leakage from the shields which may contain the neutron source. The predictions are used to ensure safe working conditions for staff near the shields in particular circumstances. The calculations have been performed using accurate modelling of the neutron and gamma ray emission from the ^{252}Cf source, and from the three shields. The differences on calculated dose rates deriving from the use of different flux-to-dose conversion factors have also been investigated. A comparison of dose rates calculated and measured is presented from the bare source (in cell) and with the source within its TF.

The experimental values for bare ^{252}Cf source and Transport Flask were compared to the MCNPX calculations. The majority of the calculated dose rate values were under the measured ones. It was assumed that the underestimation is due to the incompleteness of the model environment since no scattering was taken into account. In order to obtain more precise calculation results, further upgrade of the model with the surrounding environment is essential for the future dose rates calculations.

ACKNOWLEDGMENTS

This work was supported by EURATOM and carried out within the framework of the European Fusion Development Agreement. The views and opinions expressed herein do not necessarily reflect those of the European Commission.

REFERENCES

[1]. D.B. Syme et al., Fusion Yield measurements on JET and their Calibration, ISFNT-2013 Conference, Proceedings, Barcelona, September 16-20, 2013.

[2]. B. Haist, S. Mills, A. Loving, Remote handling preparations for JET EP2 shutdown, Fusion Engineering and Design **84** (2009) 875-879.

[3]. G.W. McKinney, M.R. James et al., MCNPX 2.7.X - New Features Being Developed, LA-

UR-09-6788, IEEE/NSS Conference, Proceedings, Orlando, FL, October 25-31, 2009.

[4]. D.L. Aldama, A. Trkov, FENDL-2.1: Evaluated nuclear data library for fusion applications", INDC(NDS)-467, IAEA, Vienna, 2004.

[5]. ICRP, Conversion Coefficients for use in Radiological Protection against External Radiation. ICRP Publication 74. Ann. ICRP 26 (3-4), 1996.

[6]. ANSI/ANS-6.1.1 Working Group, D.C. Kaul (Chairman), American National Standard Neutron and Gamma-Ray Flux-To-Dose Rate Factors, ANSI/ANS-6.1.1-1991 (W2001), American Nuclear Society, Lagrange Park, Illinois, 1991.

[7]. A. Santamarina et al., The JEFF-3.1.1 Nuclear Data Library, NEA No. 6807 OECD/NEA, 2009.

[8]. N Roberts, National Physical Laboratory, Teddington, Middlesex, UK. Private Communication

[9]. N. Roberts, National Physical Laboratory (UK), Certificate of calibration of a 200µg (4GBq) Cf-252 source in a modified SRS capsule, ref. 1254NU, 14 February 2013.

[10]. L. Snoj et al., Calculations to support JET neutron yield calibration: Neutron scattering in source holder, Fusion Engineering and Design **87** (2012) 1846-1852.

	ANSI/ANS, [Sv/h]	ICRP-74, [Sv/h]	Measured, [Sv/h]
Neutrons	1.03e-03	3.47e-03	3.2e-03
Gammas	1.28e-04	1.60e-04	2.2e-04

Table 1. The comparison of calculated and measured dose rate values.

Direction			Distance from source, [m]	ANSI/ANS-6.1.1-1991, [Sv/h]	ICRP-74, [Sv/h]	Measured, [Sv/h]
Along central plug axis (caps region)	Inner	*n*	TF contact	2.45e-06	5.14e-06	6.00e-06
			1.0 (X2)	1.25e-06	2.52e-06	-
			1.5 (X1)	4.78e-07	1.06e-06	3.50e-06
		γ	TF contact	6.84e-06	1.18e-05	2.00e-05
			1.0 (X2)	3.68e-06	6.51e-06	-
			1.5 (X1)	1,78e-06	2.79e-06	7.00e-06
	Outer	*n*	TF contact	1.81e-06	4.35e-06	3.00e-06
			1.0 (X3)	9.30e-07	2.12e-06	-
			1.5 (X4)	4.14e-07	8.20e-07	1.00e-06
		γ	TF contact	4.52e-06	6.70e-06	2.50e-05
			1.0 (X3)	2.41e-06	3.85e-06	-
			1.5 (X4)	1.04e-06	1.56e-06	6.00e-06
Perpendicular to central plug		*n*	TF contact	6.50e-06	1.59e-05	1.50e-05
			1.0 (Z2,3;Y2,3)	2.65e-06	6.35e-06	-
			1.5 (Z1,4;Y1,4)	6.85e-07	1.45e-06	2.50e-06
		γ	TF contact	1.51e-05	2.34e-05	7.00e-05
			1.0 (Z2,3;Y2,3)	6.38e-06	9.96e-06	-
			1.5 (Z1,4;Y1,4)	2.02e-06	2.33e-06	1.00e-05

Table 2. Dose rates from TF calculated employing ANSI/ANS-6.1.1 and ICRP-74 conversion factors in comparison with measured values.

Direction		Distance, [m]	OS, [Sv/h]	OS+AS, [Sv/h]
Along central plug axis	n	1.0 (X2,3)	6,73e-06	7,66e-06
		1.5 (X1,4)	2,85e-06	3,34e-06
	γ	1.0 (X2,3)	9,60e-06	1,12e-05
		1.5 (X1,4)	4,01e-06	4,73e-06
Perpendicular to central plug axis (horizontal)	n	1.0 (Z2,3)	2,08e-05	9,98e-07
		2.0 (Z1,4)		1,60e-07
	γ	1.0 (Z2,3)	2,83e-05	5,43e-06
		2.0 (Z1,4)		1,08e-06
Perpendicular to central plug axis (vertical)	n	1.0 (Y2,3)	7,02e-06	8,12e-06
		1.5 (Y1,4)	3,12e-06	3,42e-06
	γ	1.0 (Y2,3)	9,45e-06	1,11e-05
		1.5 (Y1,4)	3,99e-06	4,55e-05

Table 3. The comparison of dose rates from the bare ^{252}Cf source and the OS (and with AS) cases. (ICRP-74 conversion factors for gammas and for neutrons).

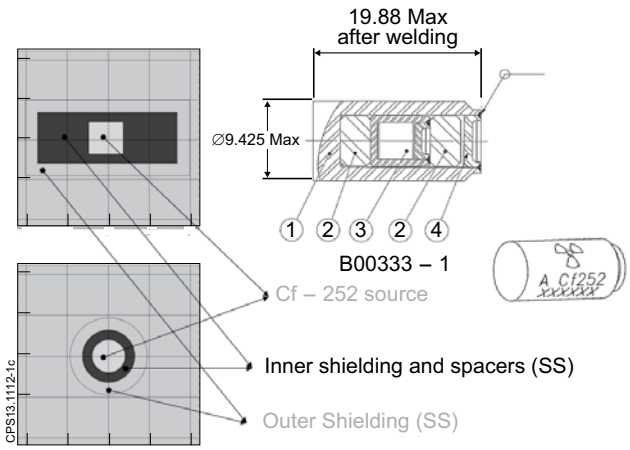

Figure 1: The ^{252}Cf source (bare): 1) outer shielding; 2) inner shielding and spacers; 3) ^{252}Cf source location; 4) screw. (SS 316L).

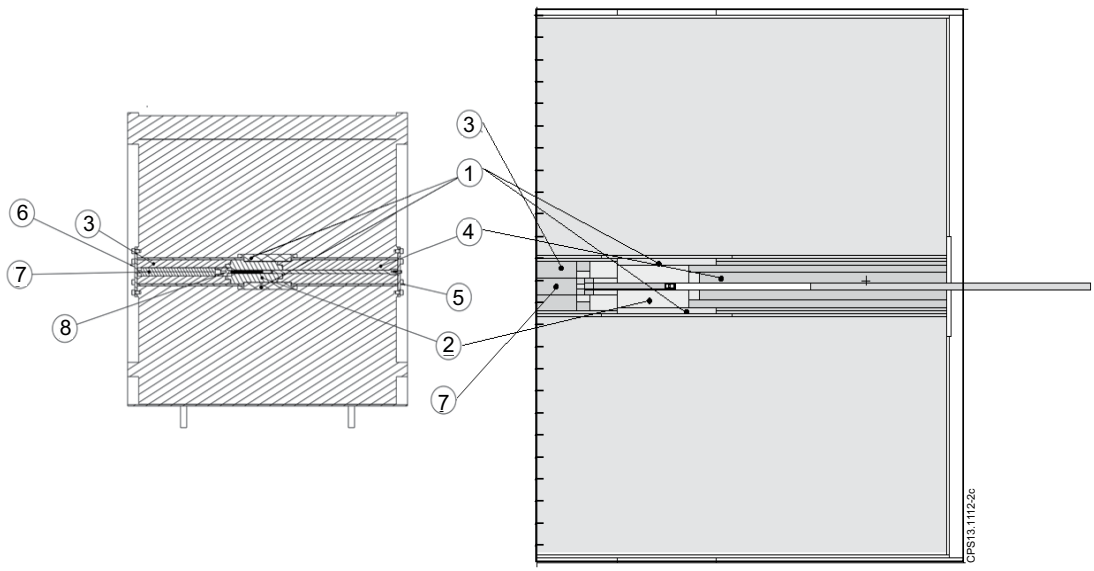

Figure 2: Case investigated: the source-in-baton within the TF with central plug half removed (outer part, case -2).

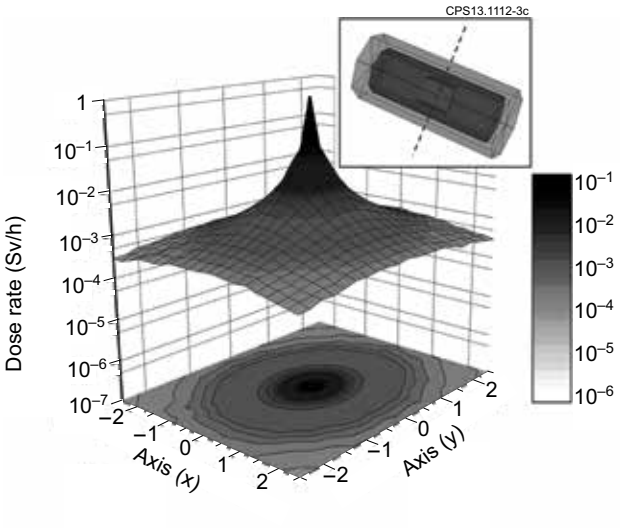

Figure 3: ^{252}Cf source model and dose rate map for neutrons.

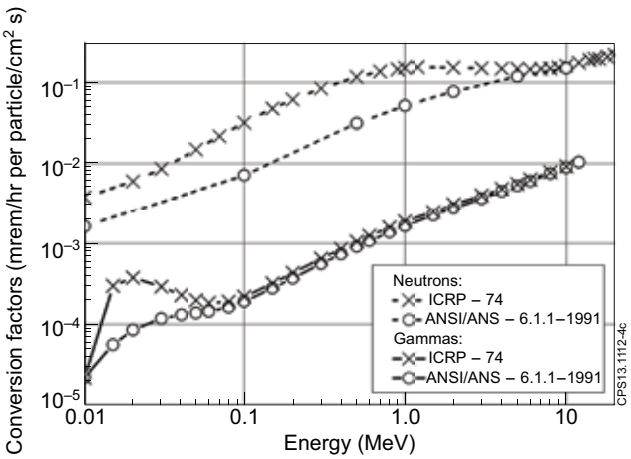

Figure 4: The comparison of the dose conversion factors (ICRP-74 and ANSI/ANS 6.1.1) for neutrons and gammas.

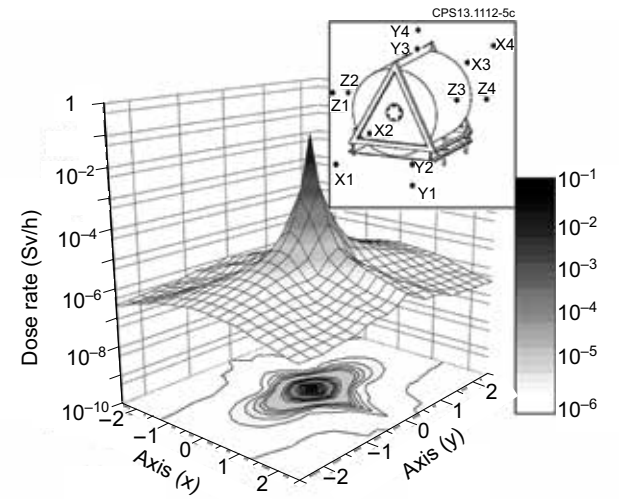

Figure 5: Graphical visualization of selected points for the calculations of dose rates and map for photons. Circles Yi and Zi correspond for perpendicular to the central plug points and circles Xi – along the central plug points (not to scale, case 2).

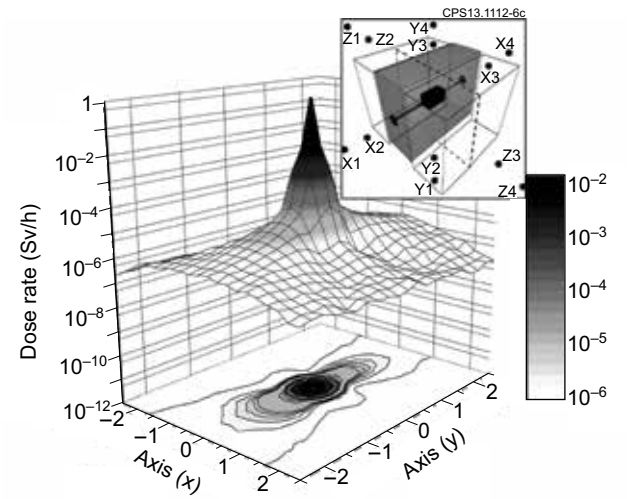

Figure 6: Graphical visualization of selected points for the calculations of dose rates and map for neutrons. Circles Yi correspond to orientations perpendicular to the central plug axis and circles Xi – along the central plug axis. Circles Z1 and Z4 – special cases for the OS with AS (not to scale).