EUROPEAN FUSION DEVELOPMENT AGREEMENT

EFDA–JET–CP(04)01/16

D.L. Hillis, D.T. Fehling, R.E. Bell, D.W. Johnson, K-D Zastrow,
A Meigs, C.Negus, C. Giroud, M. Stamp,
and JET-EFDA Contributors

A High throughput Spectrometer System for Helium Ash Detection on JET

A High throughput Spectrometer System for Helium Ash Detection on JET

D.L. Hillis[1], S. D.T. Fehling[1], R.E. Bell[2], D.W. Johnson[2], K-D Zastrow[3], A Meigs[3], C. Negus[3], C. Giroud[3], M. Stamp[3]
and JET-EFDA Contributors*

[1]Oak Ridge National Laboratory, Oak Ridge TN, 37831
[2]Princeton plasma Physics laboratory, Princeton, NJ 08543
[3]EURATOM/UKAEA Fusion Association, Culham Science Centre, Abingdon, OX14 3DB, UK
** See annex of J. Pamela et al, "Overview of Recent JET Results and Future Perspectives", Fusion Energy 2000 (Proc. 18th Int. Conf. Sorrento, 2000), IAEA, Vienna (2001).*

Preprint of Paper to be submitted for publication in Proceedings of the
15th HTPD Conference,
(San Diego California, USA 18-22 April 2004)

ABSTRACT.
Acquiring information about helium ash production and transport is fundamental for future burning plasma devices, such as ITER, since the helium ash must be continuously removed from the plasma to prevent the dilution of the Deuterium-Dritium (DT) fuel. This diagnostic for future JET DT operation uses chargeexchange recombination spectroscopy in conjunction with the JET neutral heating beam to measure the helium density at 20 radial locations across the JET plasma via the 4686Å He^+ line and an array of heated 1mm quartz fibers. The CXRS diagnostic utilizes a high throughput short focal length spectrometer with f/1.8 input optics, two entrance slits, a holographic transmission grating, and refractive optics. The detector is a thinned back-illuminated charge coupled device that has a high quantum efficiency, a 10MHz readout speed, and a time resolution of 5ms.

1. INTRODUCTION

The understanding of helium accumulation and/or removal of helium ash from the core plasma is fundamental for future burning plasma devices, such as ITER, since the helium ash must be continuously removed from the plasma core to prevent the dilution of the Deuterium-Tritium (DT) fuel and concomitant quenching of the burn. The possible future DT operation of JET provides a unique opportunity to observe the direct production of helium ash and its transport. This diagnostic for possible future JET DT operation uses Charge-Exchange Recombination Spectroscopy (CXRS) in conjunction with the JET neutral heating beam to measure the helium density during DT operation at 20 radial locations (≈ 4 cm resolution) across the JET plasma via the 4686 Å, n = 4-3 He^+ line and an array of heated 1 mm quartz fibers (to prevent browning from neutrons). Utilizing the helium density profiles the He ash transport and removal can be evaluated.

The CXRS Helium spectrometer utilizes a high throughput short focal length spectrometer with f/1.8 input optics, two entrance slits, a holographic transmission grating, refractive optics, and a Charge Coupled Device (CCD) camera. This diagnostic is designed to complement the existing CXRS diagnostic system on JET which has high resolution, but poor light collection efficiency[1]. The only previous measurement of helium ash formed during DT operation of a tokamak was performed on TFTR[2]. In future operation of JET helium ash measurements will be performed using this high efficiency spectrometer system to measure the helium ash transport in ELMing Hmode and high performance plasmas relevant to ITER. Two of the high throughput spectrometers will be installed on JET. One spectrometer will be dedicated to helium ash measurements, while the other will be utilized for ion temperature, toroidal rotation, and carbon density measurements.

2. EXPERIMENTAL ARRANGEMENT

A. COLLECTION OPTICS AND FIBERS

Two sets of collection optics mounted in periscopes are used to image the outer half of the JET plasma onto fiber optics that conduct the light to the spectrometers. The geometrical arrangement of the heating neutral beams is shown in Fig.1, together with the CXRS lines of sight. The optical

heads of the periscopes consist of a short focal length quartz multiplet (F = 50 mm, f/2.0) which image the helium or carbon charge exchange emission onto twenty 1-mm heated quartz fibers mounted within each periscope. The plasma light is then transferred 120 meters away from the tokamak to a low-radiation area, where the spectrometer systems are located. The quartz fibers are heated to prevent browning during deuterium-tritium operation The first 25 meters of the quartz fiber, which are within the JET biological radiation shield, are protected by an aluminum jacket and enclosed in a metal insulated tube which is heated to 250°C. During deuterium-tritium operation the fiber transmission can be substantially reduced from browning of the quartz fibers (production of color centers) due to athe influence of neutron and high radiation interactions with the fibers. This effect is avoided by heating the fibers to 250°C and thermally annealing out the color centers as they form[3]. The fiber transmission and possible luminescence of the fibers has been monitored in previous deuteriumtritium experiments (lower neutron yield) and no significant effect was observed.

B. SPECTROMETERS

The Kaiser Optical Systems, Holospec spectrometers are shown schematically in Fig. 2. The compact spectrometers use refractive optics to collimate the image of the entrance slits, which is then dispersed by a transmission grating, and finally refocuses onto the image place of a frame transfer CCD detector. The input optics use a standard camera lens of 85 mm focal length to collect light at f/1.8, allowing the fibers to be directly coupled to the spectrometer without intervening optics. The output lens is a 50 mm f/1.2 lens, which preserves the entendue of the spectrometer. The transmission grating is a hologram with layers of varying refractive index in the volume of the film. The grating is fixed in the spectrometer in a kinematic mount and its spatial frequency is set by the central wavelength desired in the image plane. The stigmatic imaging from the photographic lenses allows fibers to be stacked closely at the entrance slit without worry of overlap of their images on the detector. Ten fibers are stacked vertically at each entrance slit; the jacket is removed and the fibers stacked cladding to cladding. Each spectrometer has two entrance slits (separated by about 5 mm). The fibers are mounted onto an entrance slit assembly, which is kinematically mounted for easy removal and replacement. A bandpass filter of 110 A wide, (75% transmission) is mounted on the collimating lens to prevent overlap of spectra from the multiple entrance slits. An entrance slit width 250 μm is used which produced an instrumental function about 7 A wide. The linear dispersion of the spectrometers is ~18.5 A /mm on axis. Due to the short focal length, the dispersion varies about ± 8% across the 8.2-mm-wide detector, The short focal length causes a strong curvature in the image plane, therefore curved entrance slits are required to straighten the slit image at the CCD detector[4].

C. CCD DETECTORS AND DATA ACQUISITION

A charge coupled device (CCD) is used for the detector in the imaging plane of the spectrometer. The CCD camera (Roper Scientific, Cascade 512B) has a readout rate of up to 10 MHz and digitizes to 16 bits. The CCD is thermoelectrically cooled and has a frame transfer readout with 512 × 512 pixels in the active area. With each pixel measuring 16 × 16 ∫m, the entire active area is 8.2 × 8.2mm. The well depth of each pixel is 2×10^5 electrons and in readout mode the well depth is

8×10^5 electrons. The frame transfer time of the image to the mask area is ~1.3ms. The CCD is thinned and back-illuminated giving a high quantum efficiency (QE"H 85%) near the HeII 4686A wavelength. The readout time for the entire CCD is ~ 30ms. With on-chip binning in the vertical shift direction, this time is reduced to 2.2ms with 10 bins). The system is designed for operation down to 5ms integration times. A wavelength calibration of the spectrometer around 4686A is accomplished with a Xenon discharge lamp. Absolute calibration of the light intensity (photons/cm 2-steradian-s-A) for each optical fiber viewing the plasma is accomplished by using a Labsphere calibrated light source in front of the fibers during vacuum openings of JET.

A chopper wheel is used in front of the CCD (see Fig. 2) to block illumination during the frame transfer period. Typically frame transfer CCDs are not chopped since the transfer time is short compared to typical integration times. In this application, however, with the shorter 5ms integration times blanking is necessary. A 6 inch chopper wheel with a single tab is spun by a chopper motor at 50Hz. The width of the tab corresponds to about 1.3ms, which accounts for the 1.3ms transfer time, the transit time of the tab across the CCD. The chopper is synchronized to pulses from the timer that also controls the camera readout time. This timer is linked to the JET master clock to synchronize the data acquisition to the start of the plasma discharge.

Data from each CCD is digitized in the camera and transferred to the memory of a Personal Computer (PC). Each of the CCD detectors uses a dedicated PC running data acquisition software written for the JET computer system. The PCs are controlled automatically by File Transfer Protocol (FTP) commands from a central JET UNIX data acquisition computer over Ethernet connections. Data from each JET discharge is acquired on the PC and is automatically archived on the main JET data storage system.

3. APPLICATION OF THE DIAGNOSTIC

Checkout of the diagnostic is accomplished by gas injection of ~5% helium into JET. A typical helium spectrum from JET during ELMing H-mode plasma operation is shown in Fig.3. Commissioning and final absolute calibration of this high throughput CXRS diagnostic system is scheduled to begin in Spring 2005 in preparation for possible future DT operation of JET.

ACKNOWLEDGEMENTS

This research is sponsored in part by the USDOE, Office of Fusion Energy Science, under contracts DE-AC0500OR227.

REFERENCES

[1]. M.G. von Hellermann, W. Mandl, et al., Rev. Sci. Instrum. **61**, 3479 (1990).

[2]. E.J. Synakowski, R.E. Bell, R.V. Budny, et al., Phys. Rev. Lett. **75**, 3689 (1995).

[3]. A.T. Ramsey, W. Tighe, J. Bartolick, and P.D. Morgan, Rev. Sci. Instrum. **68**, 632 (1997).

[4]. R.E. Bell, L.E. Dudek, B. Grek, et al., Rev. Sci. Instrum. **70**, 821 (1998).

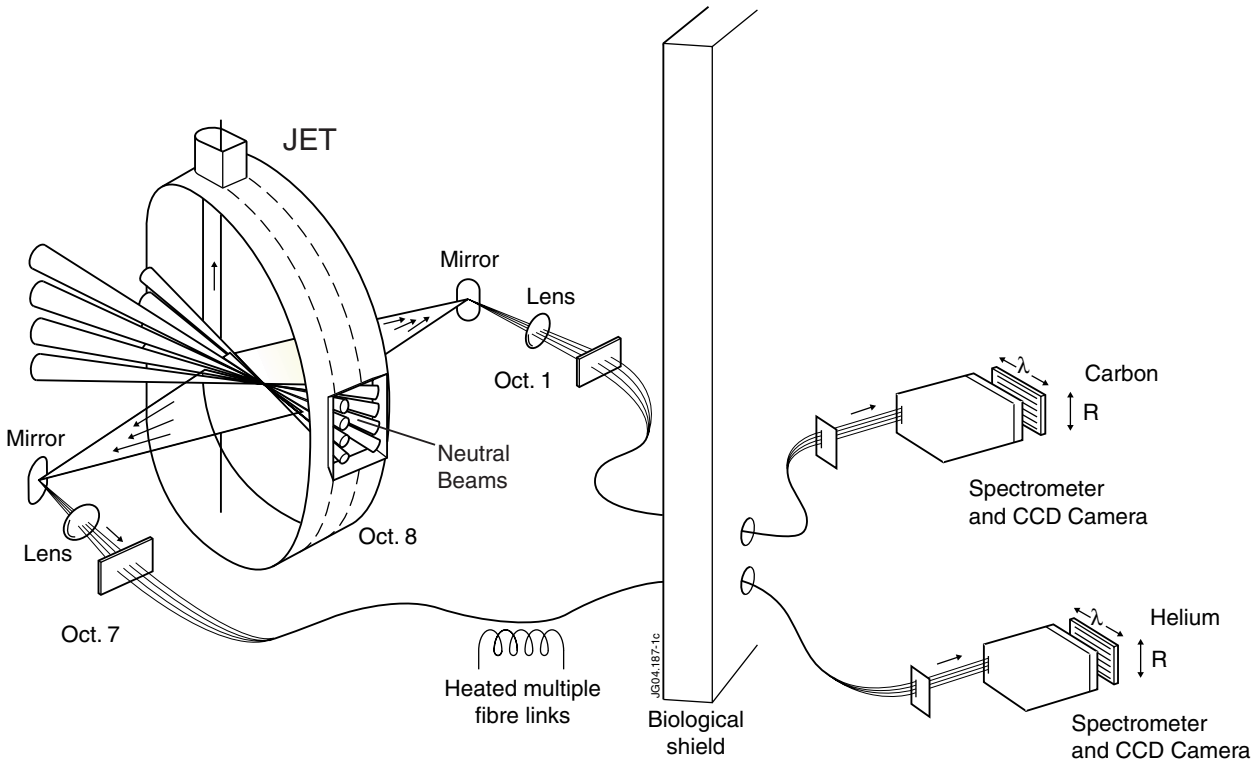

Fig.1: The JET CXRS viewing geometry. Two sets of sightlines span the major radius of the plasma and fibres relay the visible CXRS light to the spectrometers.

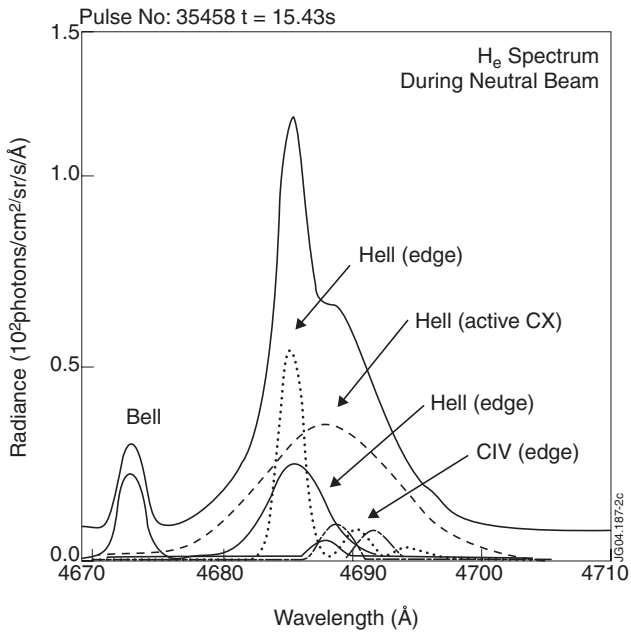

Fig.2: Schematic of spectrometer, chopper wheel, and CCD detectors.

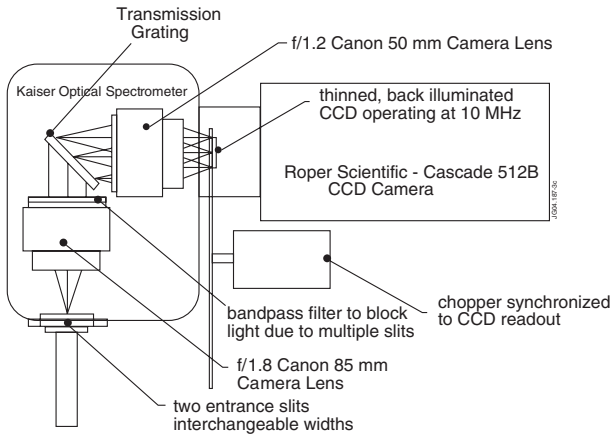

Fig.3: Typical helium CXRS spectrum in JET when ~ 5% He is injected into the plasma. Both the edge helium line and the charge exchange (CX) helium lines at 4686 Å are clearly visible along with some neighbouring impurity lines.